CSO | Stormwater Management
HYDROVEX®
CCV Check Valve



WATER TECHNOLOGIES

VEOLIA

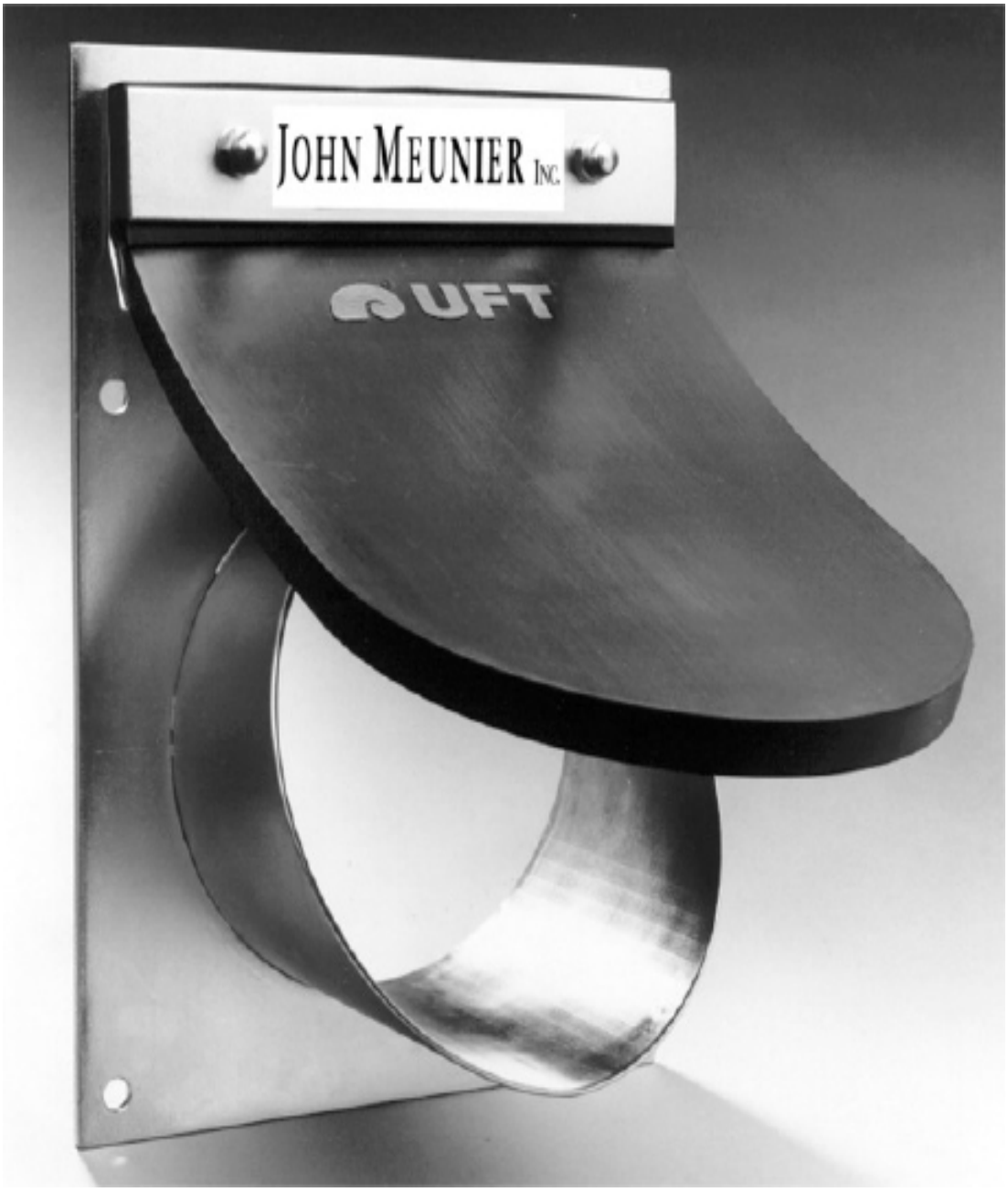

APPLICATIONS

The **HYDROVEX® CCV Check Valve** is designed for use in the drinking water and wastewater sectors. It is particularly suitable where low pressure loss in the flow direction is required and where back pressure is minimal, such as in wastewater pipelines, retention basins of all kinds, overflows and sewage treatment plants. As standard, the **HYDROVEX® CCV Check Valve** are available for diameters from DN 100 to 600 mm.

ADVANTAGES

- Requires no reinforcement
- Corrosion resistant construction
- Easy to open
- Completely waterlight in backflow conditions
- Easy to install

OPERATION

At rest, the soft rubber flap rests freely on the thin, inclined section of the stainless steel pipe. The flap opens at the slightest upstream pressure. For higher loads, the flap is pushed completely out of the flow passage section. In the flow direction, the **HYDROVEX® CCV Check Valve** has exceptionally low flow resistance.

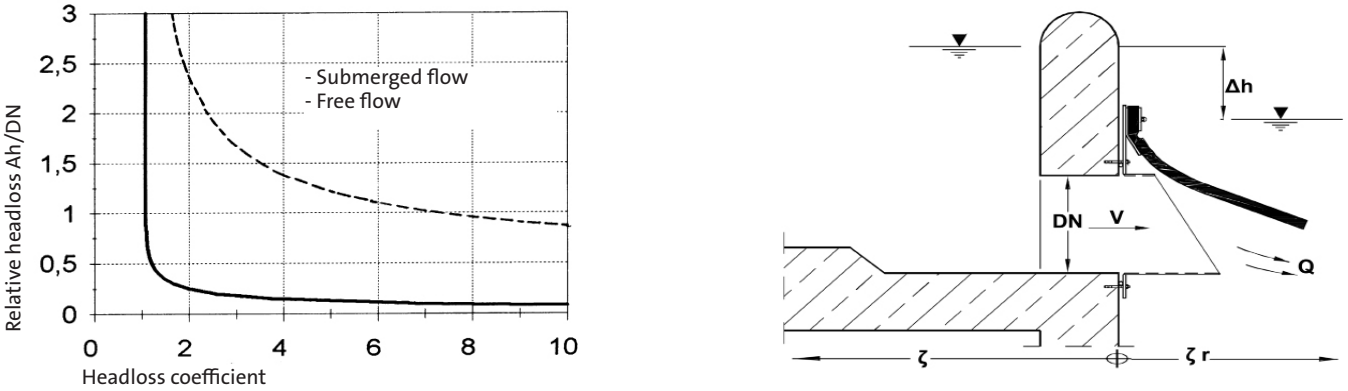

FIGURE 1 :

Headloss coefficient as a function of the difference in water height of the non-return ***HYDROVEX® CCV Check Valve***

In case of downstream backflow, the rubber flapper presses firmly and evenly against the thin, polished edge of the pipe. For higher downstream water loads, the flapper curves sharply into the pipe. The protruding rubber part (see Figure 3 - dimension Ü) prevents the flapper from being "sucked" into the pipe. The sealing is excellent even in the case of charged fluids thanks to the high pressures applied and their uniform distribution. Debris trapped on the seat is either crushed or the seal is made all around.

FIGURE 2 :

The soft rubber flap is easy to lift from the seat and reliably sealed by back pressure



HYDRAULIC BEHAVIOR

The **HYDROVEX® CCV** Check Valves have been optimized and calibrated on our test bench. As a result, comprehensive and proven data on their hydraulic behavior are available.

In pipeline calculations, the pressure drop coefficient is used to describe the flow resistance of pipes, valves, etc., taking Delta h as the pressure difference of the conveyed water. The pressure drop coefficient of the **HYDROVEX® CCV Check Valve** is calculated at the front edge of the inlet flange (wall mounting flange). The pressure drop coefficient is the sum of the pressure drop coefficients on the upstream (inlet) side, which must be calculated on a case-by-case basis.

$$Q = A_0 v = \frac{\pi DN^2}{4} \sqrt{2g \frac{\Delta h}{(\zeta_e + \zeta_r)}}$$

In this case, namely a non-return valve without reinforcement, two types of downstream flow must be distinguished: flow with reflux and free flow. The pressure loss coefficient decreases as Delta h becomes larger and tends towards the maximum 1 (see Figure 1).

A pressure drop coefficient value of 1 means that the valve has no resistance. This is because the smooth, flexible leaf behaves like a perfect flat diffuser when the flow rate increases. The pressure drop coefficient for a valve with downstream reflux (submerged leaf) is smaller than for a free flow. The submerged leaf valve allows more water to pass through than the free flow valve for the same Delta h. This behavior, which seems paradoxical, comes from the fact that a submerged rubber tongue is under the effect of a vertical thrust and that this return energy gain is even better due to its excellent diffusion property.

Calculating the flow rate is a bit restrictive because the head loss coefficient varies depending on the water height. This is why, in addition to Figure 1, we have, for the four most common cases, wall installation, installation at the end of the pipe, each with submerged flow and free flow, given in Diagrams 1 to 4, the flow curves as well as the head loss values for 1 and 2 nominal diameters. For flow rates higher than those shown in Diagrams 1 to 4, we recommend **HYDROVEX® LCV** threshold valves - see data sheet.

INSTALLATION CONDITIONS

Check valves should generally be installed so that they are not permanently exposed to downstream backflow. This prevents the unit from cleaning itself using its own flow rate. Sediment then deposits in front of and behind the opening, impairing proper operation. The lower edge of the opening should be well above the dry-weather flow height. The minimum dimension F is given in Figure 3.

The rubber tab, which rests on the sloping portion of the valve's pipe, has a self-weight that must be overcome by slight upstream pressure. This opening pressure is lower in the case of a submerged valve due to the vertical thrust of the water. For the **HYDROVEX® CCV Check Valve**, the following values are used:

Minimum opening pressure (for all diameters)	
Free flow	0.20 DN
Flooded flow	0.00 DN

In order for the water to flow spontaneously and completely through the valve, the ground of the upstream basin should be higher by the height h_o than the lower edge of the valve inlet. For valves mounted at the end of the pipe, the last section of pipe must be given the necessary slope.

INSTALLATION

The chamber to accommodate the check valve must be clear and thoroughly cleaned before installation. Check that the wall sleeves and gate valves are the correct diameter.

To facilitate installation, it is advisable to provide a lifting system (hoist) on site. The following table lists the approximate weights of the equipment described in this manual.

The check valve must be installed on a horizontal discharge pipe and there must be no obstructions that could interfere with the device. The concrete layout must not interfere with the free flow of the fluid or create dead zones, which could encourage the accumulation of debris that could cause sealing problems. The flow approach velocity should not exceed 0.5 m/s.

MAXIMUM ALLOWABLE BACKFLOW PRESSURE

Because the rubber flap bends slightly under downstream backflow pressure and at very high pressures, there is a risk that the flap may slip inside the pipe. The following backflow pressures must be observed (see table below). The reinforced version has a less flexible and thicker rubber flap. For extreme pressures, there are special designs with double-hinged flaps (contact us).

Maximum admissible downstream reflux pressure in mCE *

DN (mm)	Standard Version (m)	Reinforced Version (m)
100	5.0	9.0
150	4.5	7.0
200	4.0	6.5
250	4.0	6.0
300	4.0	6.0
350	4.0	6.0
400	3.2	5.5
500	1.5	4.0
600	0.6	2.0

* Nominal sizes (NPS) also available

WATERPROOFING

The provisional standard DIN 19 569-2 defines five tightness classes for valves. Check valves are classified as classes 3 and 4. Measurements in our laboratory with clear water have shown that the **HYDROVEX® CCV Check Valve** meets the requirements of class 4 - superior tightness. Practical experience in sanitation shows us that the same is true because any small leaks are automatically filled by suspended solids. Practice has shown that this tightness is maintained even under wastewater conditions.

ASSEMBLY

The HYDROVEX® Check Valves are delivered ready for installation.

Type RW et Type RWA (circular inspection chamber) : The wall flange is positioned over the wall passage hole, directly opposite the PVC pipe used as formwork. The two inverts must be perfectly aligned. If the formwork pipe has a smaller or larger diameter, the invert of the valve pipe must be aligned with the formwork pipe to avoid creating a threshold. The anchors are drilled through the flange, which serves as a template. The anchors (supplied) must be tightened moderately, as the sealing gasket (supplied) must be firmly tightened, not crushed.

Type RL : The valve is flanged so that the sides of the valve are in a vertical position. From DN 200, it is not necessary to install all the bolts; 1 out of 2 or 1 out of 3 is sufficient.

Check Valve with wall flange to be anchored against a vertical flat wall TYPE RW

* DN	E1	E2	B	H	Weight
mm	mm	mm	mm	mm	Kg
100	140	240	220	300	4
150	180	310	250	360	7
200	220	390	310	420	11
250	265	470	390	490	15
300	300	540	430	550	21
350	330	610	500	610	29
400	370	680	590	700	37
500	450	830	700	820	49
600	530	980	800	950	66

Check Valve for wall passage with anchoring system in a concrete wall TYPE RWA

* DN	E1	E2	B	H	Weight
mm	mm	mm	mm	mm	Kg
100	140	240	220	300	4
150	180	310	250	360	7
200	220	390	310	420	11
250	265	470	390	490	15
300	300	540	430	550	21
350	330	610	500	610	29
400	370	680	590	700	37
500	450	830	700	820	49
600	530	980	800	950	66

Check Valve with PN 10 loose flange for fixing on pipe counter-flange or TYPE RL valve

* DN	E1	E2	B	H	Weight
mm	mm	mm	mm	mm	Kg
100	225	325	219	260	5
150	265	395	220	330	8
200	300	470	290	400	11
250	345	550	360	470	16
300	380	640	430	535	23
350	410	690	480	580	31
400	455	765	540	650	38
500	530	910	670	785	50
600	610	1.060	800	915	67

Drilled flanges PN according to DIN 2501

Dimensions for all types

* DN	DI	DA	Ü	F
mm	mm	mm	mm	mm
100	110.3	114.3	15.0	60
150	163.3	168.3	22.5	60
200	213.1	219.1	29.0	60
250	267.0	273.0	36.5	65
300	315.9	323.9	43.0	65
350	347.6	355.6	45.5	80
400	398.4	406.4	52.0	110
500	500.0	508.0	69.0	110
600	602.0	610.0	78.0	120

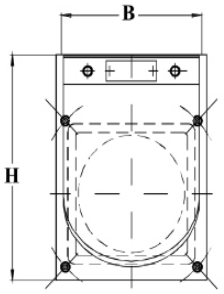

TYPE RW

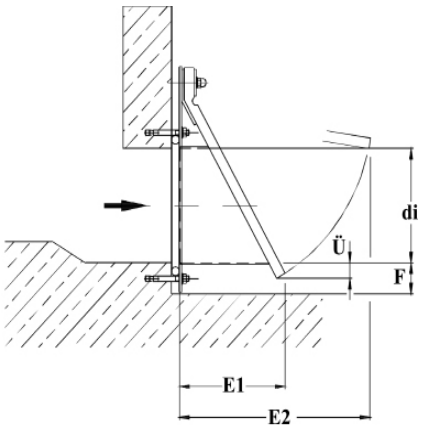

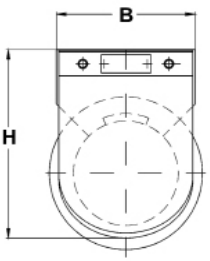

TYPE RWA

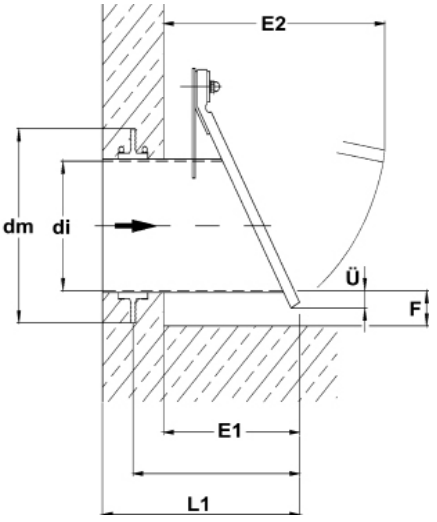

To indicate

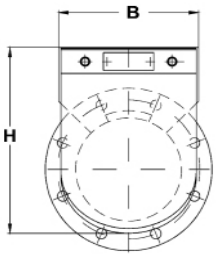

TYPE RL

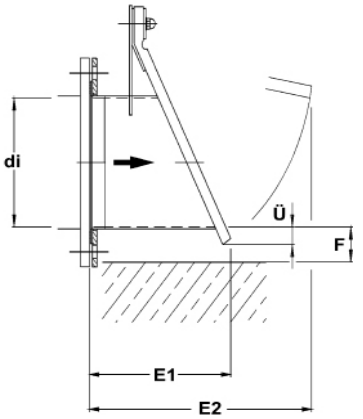

FIGURE 3 :
HYDROVEX® CCV Check Valve
Standards, Types-Dimensions-Weights

* Nominal sizes (NPS) also available

MAINTENANCE AND INSPECTION

The **HYDROVEX® CCV Check Valve** has no bearings or rotating parts. It is maintenance-free and constructed with corrosion-resistant materials. A visual inspection is recommended every three months. The flapper is then pulled upwards, and any foreign objects that may be stuck are removed. The edge of the tubing where the flapper rests must be clean, otherwise simply wipe it with a cleaning cloth. It is recommended to inspect the unit every **(3) three months** to remove debris that may be obstructing the flow. The flapper is then pulled upwards, and any foreign objects that may be stuck are removed. The edge of the tubing where the flapper rests must be clean, otherwise simply wipe it with a cleaning cloth.

TYPE RW

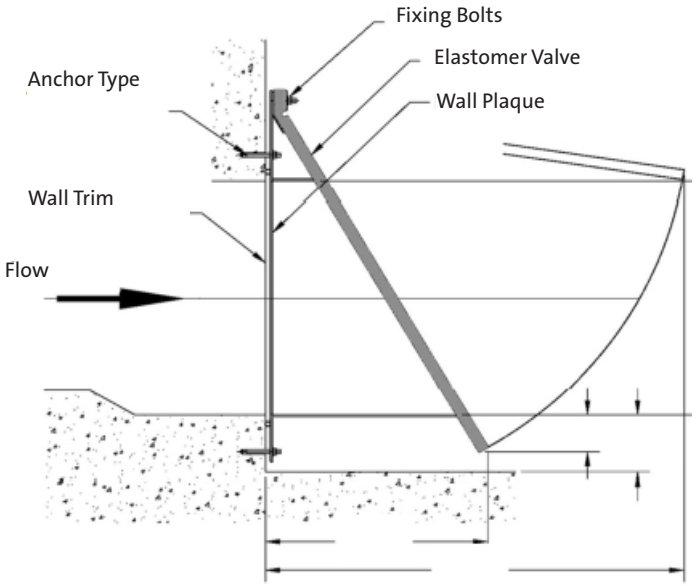

FIGURE 4 :
Reservation for the concrete setting of the HYDROVEX® CCV, Type RW

TYPE RWA

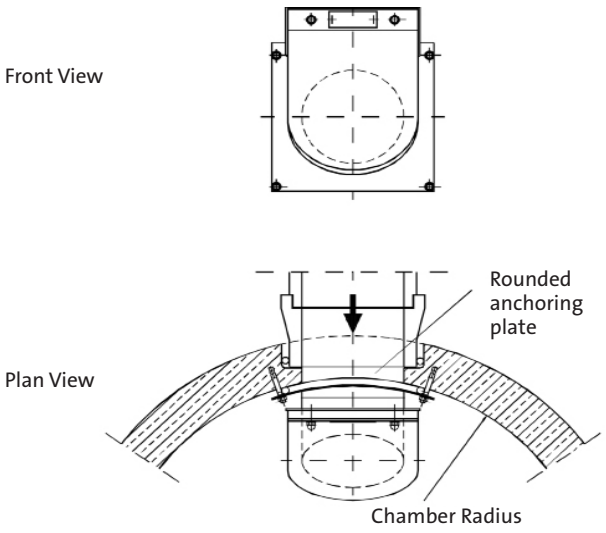

FIGURE 5 :
HYDROVEX® CCV Check Valve, to be anchored in a rounded prefabricated manhole, Type RWA

GUARANTEE

The manufacturer, Veolia Water Technologies Canada Inc., warrants the check valve against any manufacturing defects or failures when installed and used under the conditions for which it was originally designed and sold. This warranty is for 5 years from the delivery date.

Veolia Water Technologies Canada Inc. guarantees that the flow rate as measured under the original installation conditions must not exceed by more than 10% the flow rate shown on the certified curve provided by the check valve.

HYDROVEX® Check Valves must be installed according to the recommendations of Veolia Water Technologies Canada Inc.

This warranty will be voided if repairs or modifications to the equipment are made without the authorization of Veolia Water Technologies Canada Inc.

If necessary, Veolia Water Technologies Canada Inc. will be solely responsible for repairs or complete replacement of the **HYDROVEX® Check Valve** but will not be responsible in whole or in part for any handling or installation incurred as a result of these repairs.

Ressourcing the world

Veolia Water Technologies
4105 Sartelon Street, Saint-Laurent, Québec H4S 2B3
Tel: 514-334-7230 · Fax: 514-334-7519
cso@veolia.com . www.veoliawatertechnologies.ca

06/ 2025- Veolia Water Technologies Canada Inc