SOLENO HYDROSTOR HS31 SYSTEM WITH SETTLING ROW

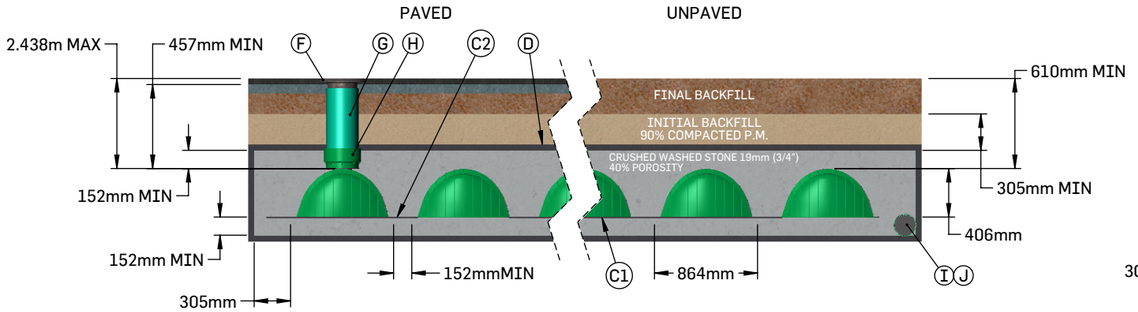

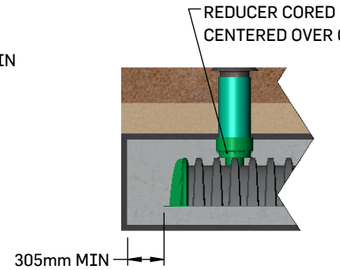

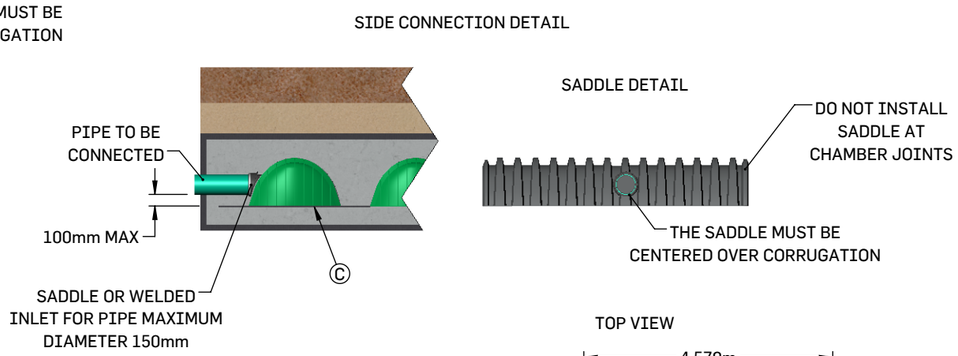

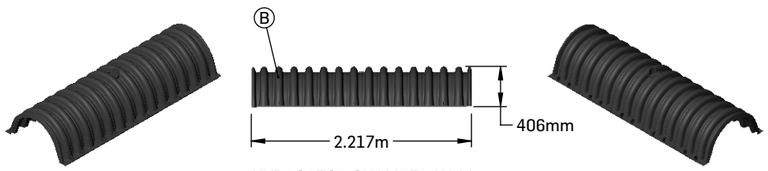

HYDROSTOR CHAMBER HS31

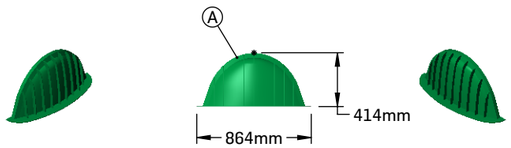

HYDROSTOR END CAP HS31



ASSEMBLED LENGTH

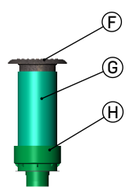

REDUCER 250mm - 150mm PVC
FOR INSPECTION PORT



AJUSTABLE FRAME
AND COVER 250mm

HYDROSTOR SYSTEM TYPE
MODEL HS31

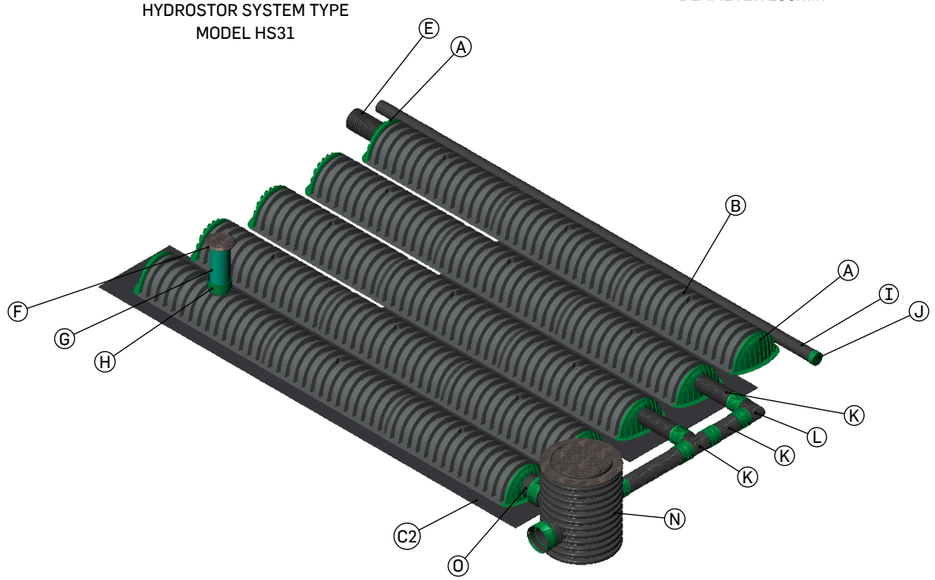

TOP VIEW

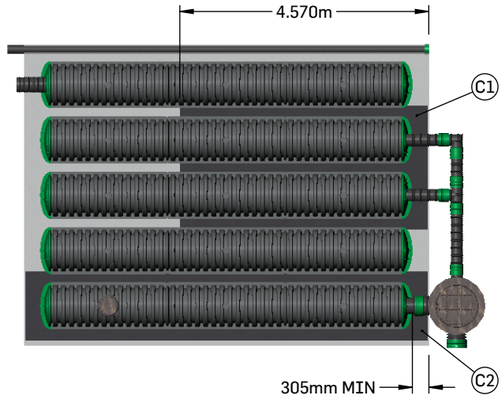

PART	DESCRIPTION
A	HYDROSTOR END CAP HS31
B	HYDROSTOR CHAMBER HS31
C1	SCOUR PROTECTION WOVEN GEOTEXTILE 2006W
C2	SEDIMENTATION WOVEN GEOTEXTILE 2006W, 2 LAYERS UNDER THE ROW
D	SOLENO TX-90 SEPARATION NONWOVEN GEOTEXTILE, ABOVE, UNDER AND ON THE SIDES
E	OUTLET SOLFLO MAX MAXIMUM DIAMETER 300mm (OPTIONAL)
F	AJUSTABLE FRAME AND COVER 250mm (OPTIONAL)
G	PVC PIPE INSPECTION PORT 250mm (PROVIDED BY OTHER) (RECOMMENDED)
H	REDUCER 250mm - 150mm PVC DR35 (OPTIONAL)
I	PERFORATED SOLFLO 150mm (OPTIONAL)
J	END CAP 150mm (OPTIONAL)
K	PIPE SOLFLO MAX 200mm
L	ELBOW SOLFLO MAX 200mm
M	TEE SOLFLO MAX 200mm
N	CORRUGATED MANHOLE SOLFLO MAX 900mm (OPTIONAL)
O	INLET SOLFLO MAX MAXIMUM DIAMETER 300mm (RECOMMANDED DIAMETER)

1. INSTALLATION MUST BE MADE IN ACCORDANCE WITH THE MANUFACTURER'S RECOMMENDATIONS.
2. SYSTEM IS DESIGNED TO WITHSTAND TRAFFIC LOAD CL-625 (CSA-S6), H-25 AND HS-25 (AASHTO).
3. HS31 CHAMBERS MUST BE MINIMALLY BACKFILLED WITH 152 mm OF CRUSHED STONE AND 305 mm OF GRANULAR MATERIAL COMPACTED AT 90% P.M.
4. THE SCOUR PROTECTION GEOTEXTILE 2006W IS PROVIDED UNDER ALL CHAMBERS WITH WATER INTAKE (OVER A LENGTH OF 4.57m).
5. SITE DESIGN ENGINEER IS RESPONSIBLE FOR ENSURING THE SUITABILITY OF THE SUBGRADE SOILS FOR THE PROPOSED STORMWATER STORAGE SYSTEM.

THIS DOCUMENT IS THE PROPERTY OF SOLENO. IT MAY NOT BE REPRODUCED OR RETRANSMITTED TO ANYONE WITHOUT EXPLICIT WRITTEN CONSENT.