SOLENO STORMCHAMBER SYSTEM SC-34E

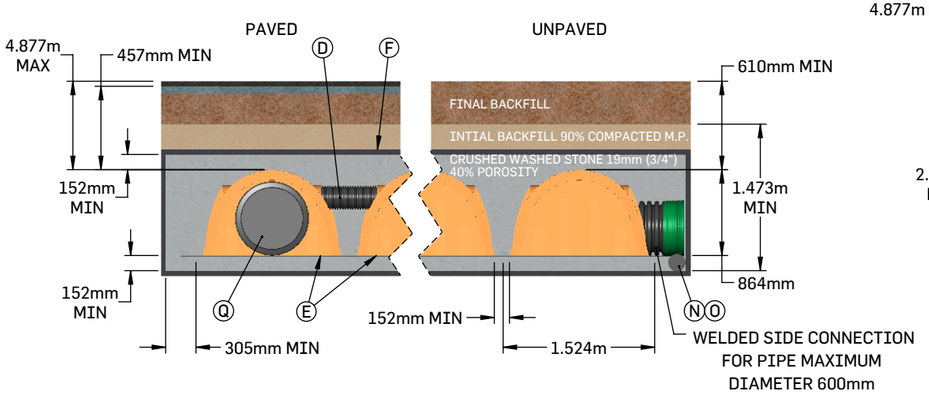

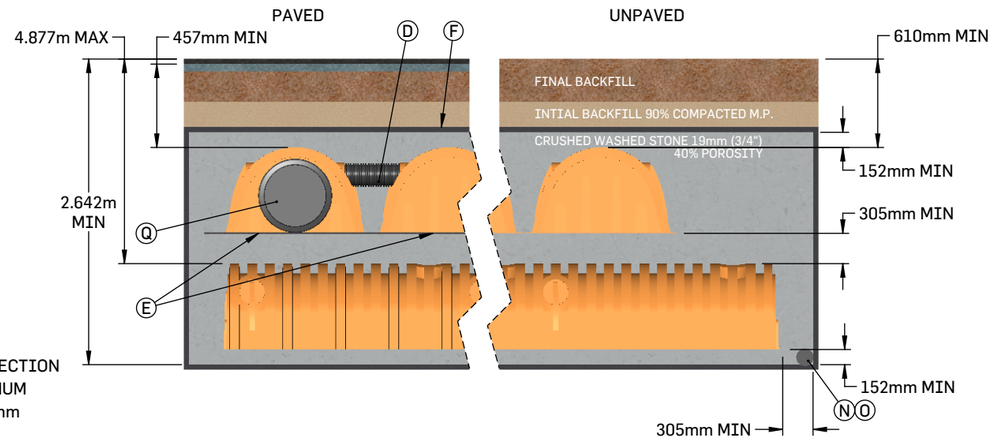

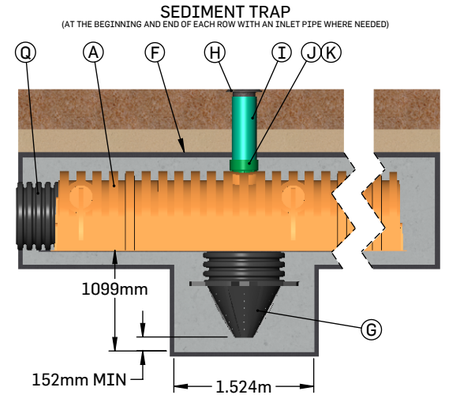

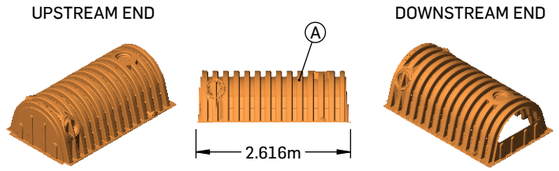

START CHAMBER
START CHAMBER IS CLOSED AT ONE END AND PARTIALLY OPEN AT THE OTHER END.

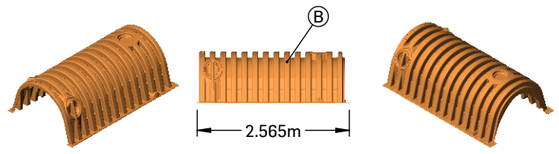

MIDDLE CHAMBRE
MIDDLE CHAMBER IS OPEN AT BOTH ENDS.

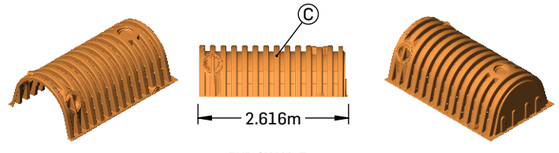

END CHAMBER
END CHAMBER IS OPEN AT ONE END AND CLOSED AT THE OTHER END.

STORMCHAMBER SYSTEM TYPE
MODEL SC-34E

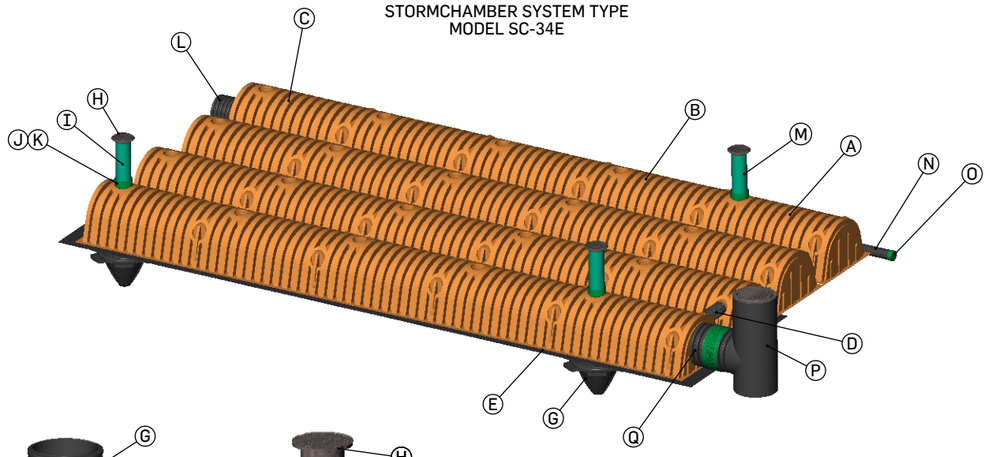

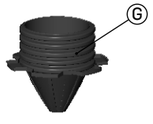

SEDIMENT TRAP



ADJUSTABLE FRAME AND COVER 250mm

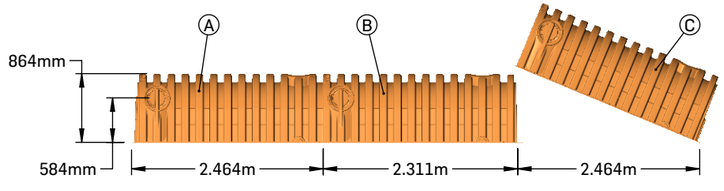

LAY-UP LENGTHS

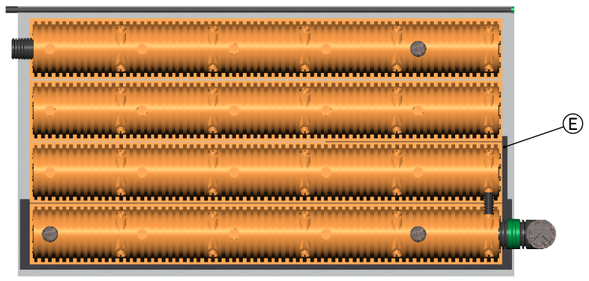

TOP VIEW

PART	DESCRIPTION
A	START CHAMBER SC-34E
B	MIDDLE CHAMBER SC-34E
C	END CHAMBER SC-34E
D	CONNECTING PIPE SOLFLO MAX 200mm LENGTH 1.5m
E	SCOUR PROTECTION WOVEN GEOTEXTILE 2006W
F	SOLENO TX-90 SEPARATION NONWOVEN GEOTEXTILE, ABOVE, UNDER AND ON THE SIDES
G	SEDIMENT TRAP
H	ADJUSTABLE FRAME AND COVER 250mm
I	PVC PIPE INSPECTION PORT 250mm (PROVIDED BY OTHERS)
J	MANHOLE ADAPTER FOR PVC 250mm DR35
K	PVC TRANSITION GASKET 250mm
L	OUTLET PIPE SOLFLO MAX MAXIMUM DIAMETER 600mm (OPTIONAL)
M	PVC PIPE INSPECTION PORT 250mm (PROVIDED BY OTHERS) (OPTIONAL)
N	PERFORATED SOLFLO 150mm (OPTIONAL)
O	END CAP 150mm (OPTIONAL)
P	SMOOTH EXTERIOR CATCH BASIN SOLFLO MAX (OPTIONAL)
Q	INLET PIPE SOLFLO MAX MAXIMUM DIAMETER 600mm

1. INSTALLATION MUST BE MADE IN ACCORDANCE WITH THE MANUFACTURER'S RECOMMENDATIONS.
2. SYSTEM IS DESIGNED TO WITHSTAND TRAFFIC LOAD CSA CL-625 AND AASHTO H-20.
3. THE SYSTEM MUST BE MINIMALLY BACKFILLED WITH 152 mm OF CRUSHED STONE AND 305 mm OF GRANULAR MATERIAL COMPACTED AT 90% P.M.
4. THE 2006W SCOUR PROTECTION WOVEN GEOTEXTILE IS PROVIDED UNDER EACH ROW WITH A SEDIMENT TRAP AND UNDER ALL CHAMBERS WITH WATER INTAKE (CONNECTING PIPE INCLUDED) OVER A LENGTH OF 4.57m.
5. SITE DESIGN ENGINEER IS RESPONSIBLE FOR ENSURING THE SUITABILITY OF THE SUBGRADE SOILS FOR THE PROPOSED STORMWATER STORAGE SYSTEM.

THIS DOCUMENT IS THE PROPERTY OF SOLENO. IT MAY NOT BE REPRODUCED OR RETRANSMITTED TO ANYONE WITHOUT EXPLICIT WRITTEN CONSENT.