# TYPICAL CORRUGATED MANHOLE 900mm (36") - WITHOUT SUMP

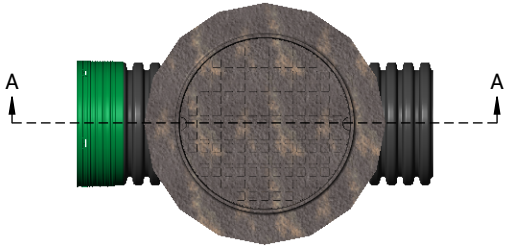




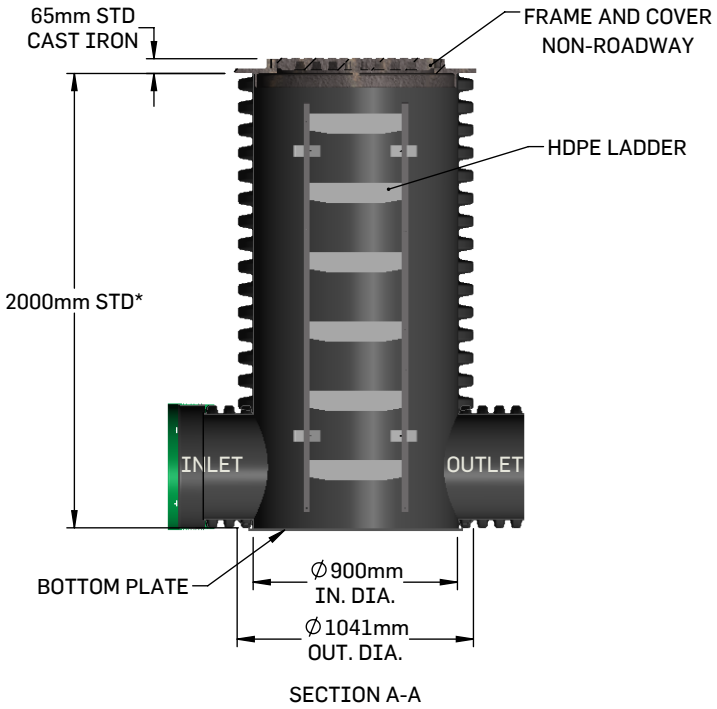


SECTION A-A

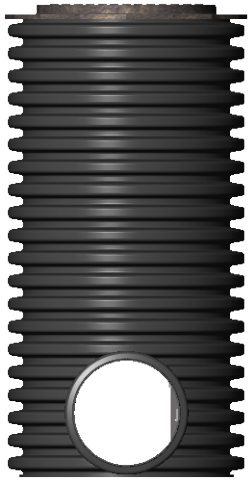

*ADJUSTABLE AS NEEDED

THIS DOCUMENT IS THE PROPERTY OF SOLENO. IT MAY NOT BE REPRODUCED OR RETRANSMITTED TO ANYONE WITHOUT EXPLICIT WRITTEN CONSENT.