TYPICAL SMOOTH EXTERIOR MANHOLE 900mm (36") - WITHOUT SUMP

SOLENO
MASTERING WATER SUSTAINABLY

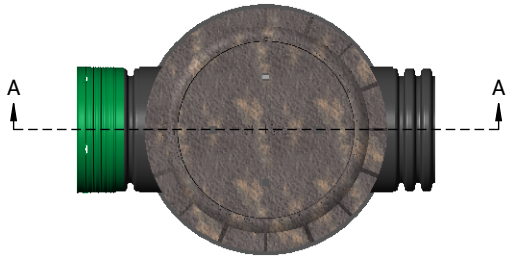



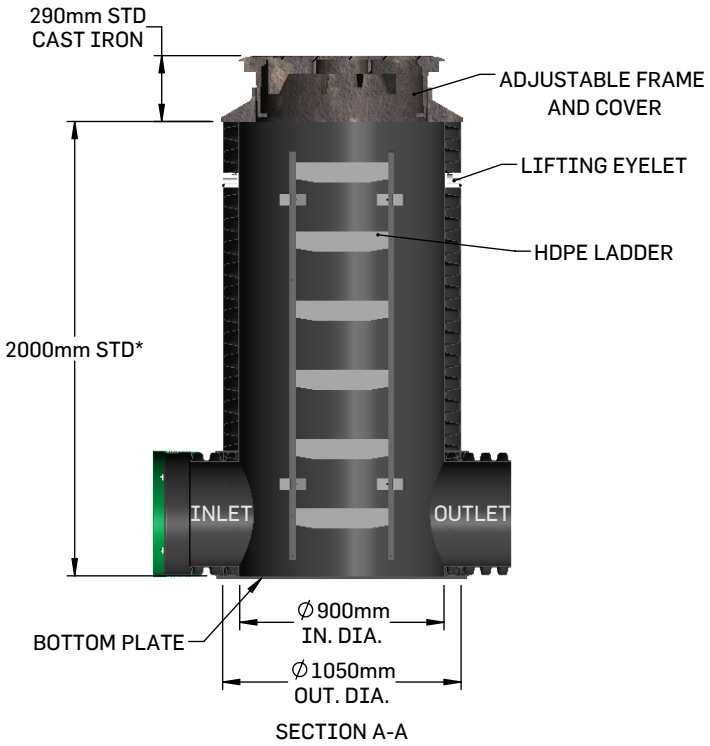

SECTION A-A

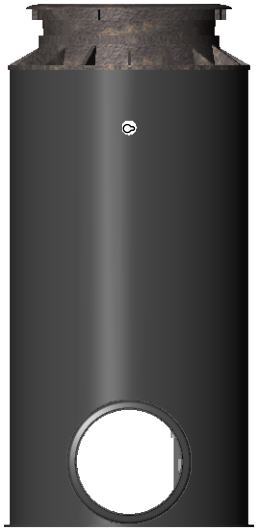

*ADJUSTABLE AS NEEDED

2026-06-26

THIS DOCUMENT IS THE PROPERTY OF SOLENO. IT MAY NOT BE REPRODUCED OR RETRANSMITTED TO ANYONE WITHOUT EXPLICIT WRITTEN CONSENT.