* Example Aqua-Swirl - Download AquaSwirl Detail Drawing for More Information.
** Filter inlet/outlet drop can vary from 12" to 43".

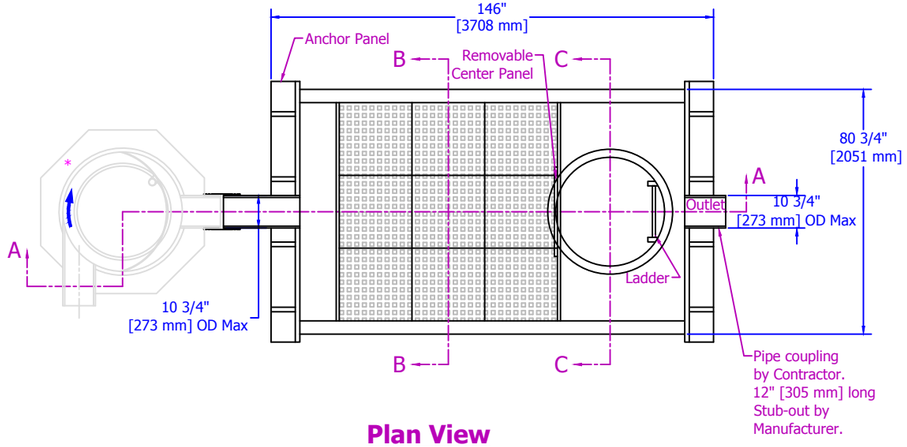

Plan View

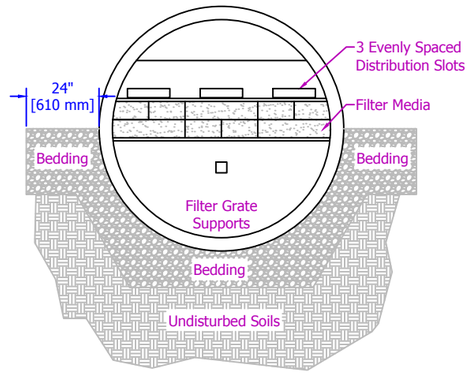

Section B-B

HDPE risers can be field cut to match finished grade by Contractor. Manhole Frame and Cover on All risers by Manufacturer. (See Detail)

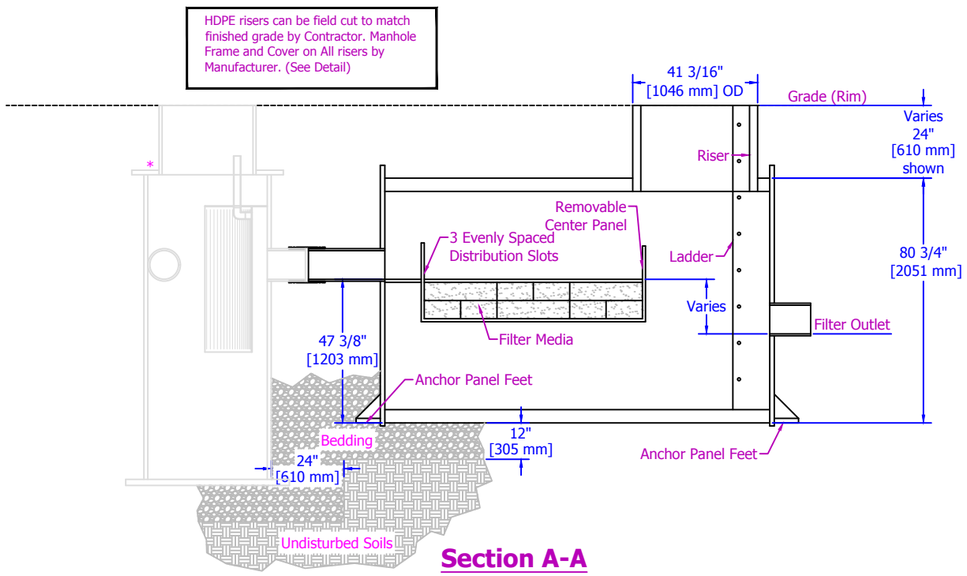

Section A-A

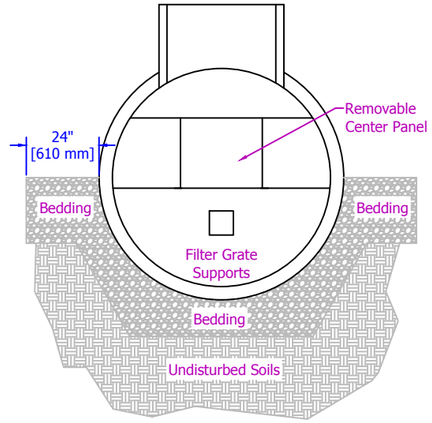

Section C-C

Gravel Backfill shall extend at least 2 feet [610 mm] outward from Swirl Concentrator and for the full height of the Swirl Concentrator (including riser) extending laterally to undisturbed soils. (See MH Detail Below)

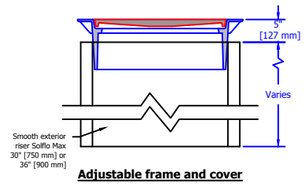

Adjustable frame and cover

AquaShield STORMWATER TREATMENT SOLUTIONS
2733 Kanasita Drive, Suite 111, Chattanoooga, TN 37343
Phone (888) 344-9044 Fax (423) 826-2112
www.aquashieldinc.com

Document:	AF-X.3 STD
Drawn By:	JCW
Scale:	1:50
Date:	03/03/16

U.S. Patent No. 6524473 and other Patent Pending

Aqua-Filter Filtration System Model AF-X.3 Off-Line Standard Detail