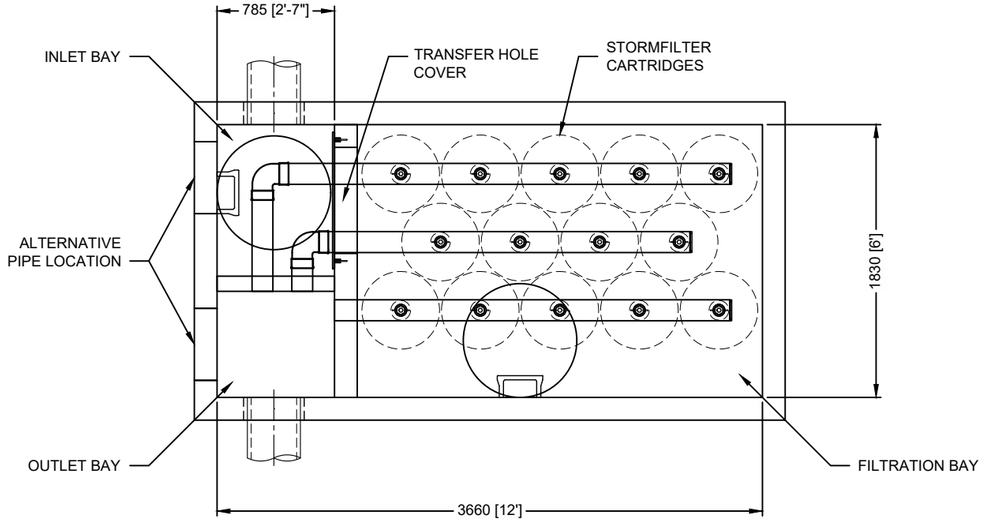

PLAN

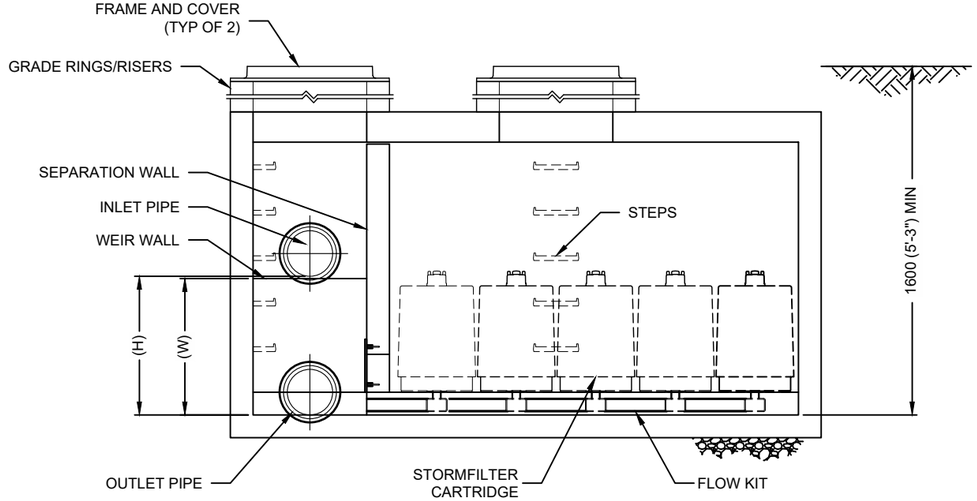

ELEVATION

STORMFILTER DESIGN TABLE

- THE TREATMENT CAPACITY OF THE STORMFILTER WITH INTERNAL BYPASS STRUCTURE MEASURING 1.83m x 3.66m (6' x 12') VARIES DEPENDING ON THE NUMBER OF CARTRIDGES AND THE FLOW RATE APPROVED BY THE APPLICABLE LOCAL REGULATIONS. THE PEAK FLOW RATE IS TO BE DETERMINED BY THE DESIGN ENGINEER.
- THE STORMFILTER WITH BYPASS STRUCTURE MEASURING 1.83m x 3.66m (6' x 12') IS AVAILABLE WITH A TOP INLET (AS SHOWN) OR A LEFT-SIDE INLET.
- ALL INTERNAL PARTS AND COMPONENTS ARE SUPPLIED BY SOLENO, UNLESS OTHERWISE INDICATED.

CARTRIDGE HEIGHT	675mm (27")	450mm (18")	300mm (12")
SYSTEM HYDRAULIC DROP (H-REQ'D. MIN.)	930mm (3.05')	700mm (2.3')	550mm (1.8')
HEIGHT OF WEIR (W)	915mm (3.00')	685mm (2.25')	535mm (1.75')
MEDIA UNIT FLOW RATE	1.13 (L/s)/m^2	1.13 (L/s)/m^2	1.13 (L/s)/m^2
CARTRIDGE FLOW RATE	1.19 L/s (18.79 gpm)	0.79 L/s (12.53 gpm)	0.54 L/s (8.35 gpm)

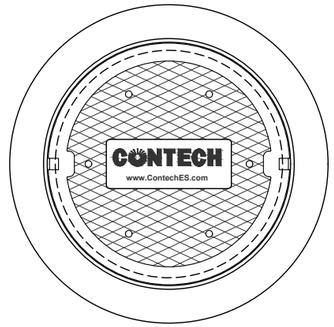

FRAME AND COVER
(DIAMETER VARIES)
N.T.S.

SITE SPECIFIC DATA REQUIREMENTS

STRUCTURE ID	*
WATER QUALITY FLOW RATE (L/s)	*
PEAK FLOW RATE (L/s)	*
RETURN PERIOD OF PEAK FLOW (yrs)	*
CARTRIDGE HEIGHT	*
# OF CARTRIDGES REQUIRED	*
CARTRIDGE FLOW RATE	*
MEDIA TYPE (CSF, PERLITE, ZPG)	*

PIPE DATA	I.E.	MATERIAL	DIAMETER
INLET PIPE	*	*	*
OUTLET PIPE	*	*	*

INLET BAY RIM ELEVATION	*
OUTLET BAY RIM ELEVATION	*

ANTI-FLOTATION BALLAST	WIDTH	HEIGHT
	*	*

NOTES/ SPECIAL REQUIREMENTS:

PERFORMANCE SPECIFICATION

THE FILTER CARTRIDGES ARE FILLED WITH FILTER MEDIA. THEY TREAT WATER PASSIVELY. WATER RISES INTO THE SYSTEM, ACTIVATES THE SIPHON, AND PERCOLATES TOWARD THE CENTER OF THE FILTER MEDIA. THE CARTRIDGES ARE SELF-CLEANING. THE DEPTH OF THE FILTER MEDIA IS 177.8MM (7 INCHES).THE FILTER MEDIA MUST REMAIN IN CONTACT WITH THE WATER FOR AT LEAST 38 SECONDS. THE SPECIFIC FLOW RATE MUST NOT EXCEED 1.36L/S PER M^2. THIS SPECIFIC FLOW RATE IS CALCULATED BY DIVIDING THE FLOW RATE (L/S) BY THE CONTACT SURFACE AREA OF THE FILTER MEDIA (M^2). THE VOLUMETRIC FLOW RATE OF THE CARTRIDGES IS 13.37L/S PER M^3.

GENERAL NOTES

1. UNLESS OTHERWISE SPECIFIED, SOLENO SUPPLIES ALL MATERIALS.
2. TO OBTAIN SPECIFIC FABRICATION DRAWINGS DETAILING THE EXACT DIMENSIONS AND WEIGHT OF EACH COMPONENT, CONTACT YOUR SOLENO REPRESENTATIVE.
3. THE FINAL DIMENSIONS AND WEIGHT OF THE SECTIONS MAKING UP THE TREATMENT UNIT DEPEND ON THE CONCRETE MANUFACTURER. THE DIMENSIONS PROVIDED ARE MINIMUM VALUES.
4. THE TREATMENT UNIT MUST COMPLY WITH THE SPECIFICATIONS OUTLINED IN THIS DOCUMENT. THE PROJECT'S CONSULTING ENGINEER IS RESPONSIBLE FOR ENSURING THAT THE EQUIPMENT GEOMETRY MEETS PROJECT REQUIREMENTS.
5. THE TREATMENT UNIT IS DESIGNED TO WITHSTAND THE STANDARD CL-625 LOAD (CAN/CSA-S6) IF IT IS BACKFILLED WITH AT LEAST 300MM OF COVER. BUOYANCY RESISTANCE IS ENSURED IF THE WATER TABLE IS AT OR BELOW THE ELEVATION OF THE OUTLET PIPE INVERT. IT IS THE RESPONSABILITY OF THE PROJECT'S CONSULTING ENGINEER TO DETERMINE THE ACTUAL WATER TABLE ELEVATION.
6. ALL STORMFILTER CONCRETE STRUCTURES MUST COMPLY WITH BNQ 2622-420 STANDARDS, AND MUST DISPLAY THE SOLENO AND CONTECH LOGOS.

INSTALLATION NOTES

A. THE UNIT INSTALLATION MUST COMPLY WITH THE BNQ 1809-300 INSTALLATION STANDARD.
B. THE CONTRACTOR MUST PROVIDE EQUIPMENT WITH THE LIFTING CAPACITY AND REACH REQUIRED FOR PLACING AND ASSEMBLING THE STORMFILTER.
C. DURING ASSEMBLY, THE CONTRACTOR MUST APPLY BUTYL JOINTS BETWEEN EACH CONCRETE SECTION.
D. THE CONTRACTOR MUST APPLY AND INSTALL THE INLET AND OUTLET PIPES.
E. THE CONTRACTOR MUST TAKE NECESSARY MEASURES TO PROTECT THE CARTRIDGES FROM SEDIMENT GENERATED DURING CONSTRUCTION.
F. THE CONTRACTOR MUST TAKE NECESSARY TO ENSURE THE UNIT IS WATERTIGHT.

The Stormwater Management StormFilter®

THIS PRODUCT MAY BE PROTECTED BY ONE OR MORE OF THE FOLLOWING U.S. PATENTS: 5,322,629; 5,524,576; 5,707,527; 5,985,157; 6,027,639; 6,649,048; RELATED FOREIGN PATENTS, OR OTHER PATENTS PENDING.

SOLENO

CONTECH ENGINEERED SOLUTIONS LLC
www.ContechES.com
9025 Centre Pointe Dr., Suite 400, West Chester, OH 45069
800-526-3999 513-645-7000 513-645-7993 FAX

THE STORMWATER MANAGEMENT STORMFILTER 6' x 12' PEAK DIVERSION STORMFILTER STANDARD DETAIL