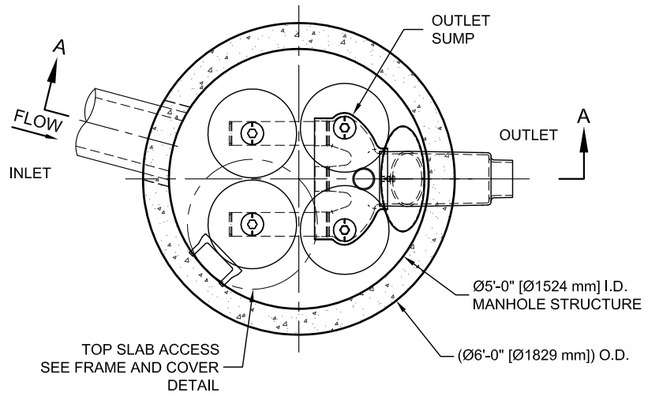

PLAN VIEW

STANDARD OUTLET RISER
FLOWKIT: 41A

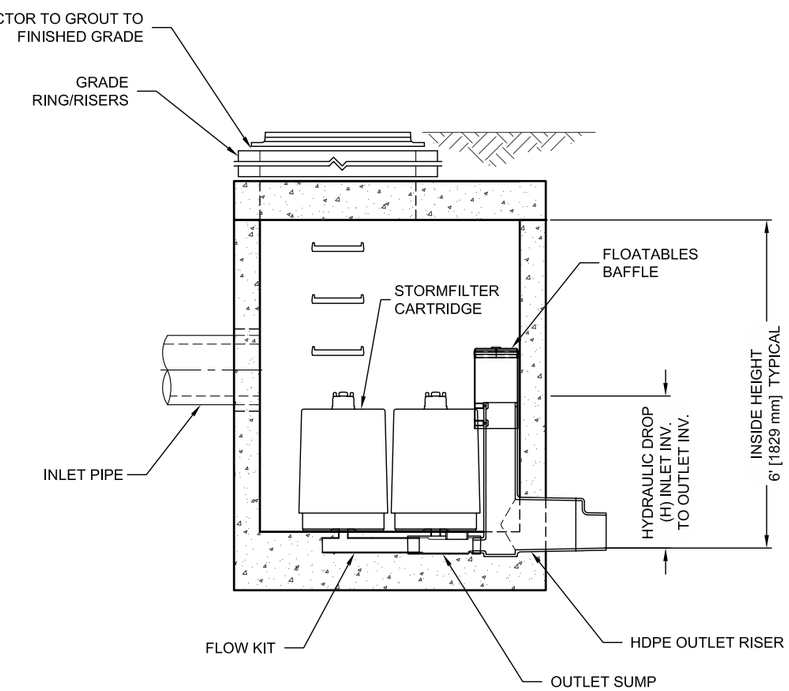

SECTION A-A

The Stormwater Management StormFilter®

THIS PRODUCT MAY BE PROTECTED BY ONE OR MORE OF THE FOLLOWING U.S. PATENTS: 5,322,629; 5,524,576; 5,707,527; 5,985,157; 6,027,639; 6,649,048; RELATED FOREIGN PATENTS, OR OTHER PATENTS PENDING.

STORMFILTER DESIGN NOTES

STORMFILTER TREATMENT CAPACITY IS A FUNCTION OF THE CARTRIDGE SELECTION AND THE NUMBER OF CARTRIDGES. THE STANDARD MANHOLE STYLE IS SHOWN WITH THE MAXIMUM NUMBER OF CARTRIDGES (4). VOLUME SYSTEM IS ALSO AVAILABLE WITH MAXIMUM 4 CARTRIDGES.
Ø5'-0" [1524 mm] MANHOLE STORMFILTER PEAK HYDRAULIC CAPACITY IS 1.0 CFS [28.3 L/s] . IF THE SITE CONDITIONS EXCEED 1.0 CFS [28.3 L/s] AN UPSTREAM BYPASS STRUCTURE IS REQUIRED.

CARTRIDGE SELECTION

CARTRIDGE HEIGHT	27" [686 mm]			18" [458 mm]			LOW DROP		
RECOMMENDED HYDRAULIC DROP (H)	3.05' [930 mm]			2.3' [700 mm]			1.8' [550 mm]		
SPECIFIC FLOW RATE (gpm/sf) [L/s/m^2]	2 [1.30]	1.67* [1.08]	1 [0.65]	2 [1.30]	1.67* [1.08]	1 [0.65]	2 [1.30]	1.67* [1.08]	1 [0.65]
CARTRIDGE FLOW RATE (gpm) [L/s]	22.5 [1.42]	18.79 [1.19]	11.25 [0.71]	15 [0.95]	12.53 [0.79]	7.5 [0.44]	10 [0.63]	8.35 [0.54]	5 [0.32]

* 1.67 gpm/sf [1.08 L/s/m^2] SPECIFIC FLOW RATE IS APPROVED WITH PHOSPHOSORB® (PSORB) MEDIA ONLY

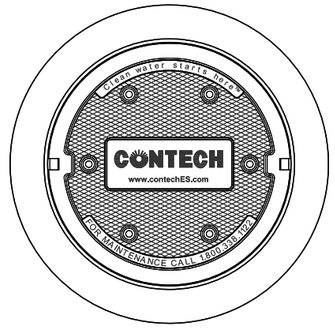

FRAME AND COVER

(DIAMETER VARIES)
N.T.S.

SITE SPECIFIC DATA REQUIREMENTS

STRUCTURE ID	*
WATER QUALITY FLOW RATE (cfs) [L/s]	*
PEAK FLOW RATE (cfs) [L/s]	*
RETURN PERIOD OF PEAK FLOW (yrs)	*
CARTRIDGE HEIGHT (SEE TABLE ABOVE)	*
NUMBER OF CARTRIDGES REQUIRED	*
CARTRIDGE FLOW RATE	*
MEDIA TYPE (PERLITE, ZPG, PSORB)	*

PIPE DATA:	I.E.	MATERIAL	DIAMETER
INLET PIPE #1	*	*	*
INLET PIPE #2	*	*	*
OUTLET PIPE	*	*	*

RIM ELEVATION	*

ANTI-FLOTATION BALLAST	WIDTH	HEIGHT
	*	*

NOTES/SPECIAL REQUIREMENTS:

* PER ENGINEER OF RECORD

GENERAL NOTES
1. CONTECH TO PROVIDE ALL MATERIALS UNLESS NOTED OTHERWISE.
2. DIMENSIONS MARKED WITH ( ) ARE REFERENCE DIMENSIONS. ACTUAL DIMENSIONS MAY VARY.
3. FOR SITE SPECIFIC DRAWINGS WITH DETAILED VAULT DIMENSIONS AND WEIGHTS, PLEASE CONTACT YOUR CONTECH ENGINEERED SOLUTIONS LLC REPRESENTATIVE. www.ContechES.com
4. STORMFILTER WATER QUALITY STRUCTURE SHALL BE IN ACCORDANCE WITH ALL DESIGN DATA AND INFORMATION CONTAINED IN THIS DRAWING.
5. STRUCTURE SHALL MEET AASHTO HS-20 LOAD RATING, ASSUMING EARTH COVER OF 0' - 5' [1524 mm] AND GROUNDWATER ELEVATION AT, OR BELOW, THE OUTLET PIPE INVERT ELEVATION. ENGINEER OF RECORD TO CONFIRM ACTUAL GROUNDWATER ELEVATION. CASTINGS SHALL MEET AASHTO M306 AND BE CAST WITH THE CONTECH LOGO.
6. FILTER CARTRIDGES SHALL BE MEDIA-FILLED, PASSIVE, SIPHON ACTUATED, RADIAL FLOW, AND SELF CLEANING. RADIAL MEDIA DEPTH SHALL BE 7-INCHES [178 mm]. FILTER MEDIA CONTACT TIME SHALL BE AT LEAST 38 SECONDS.
7. SPECIFIC FLOW RATE IS EQUAL TO THE FILTER TREATMENT CAPACITY (gpm) [L/s] DIVIDED BY THE FILTER CONTACT SURFACE AREA (sq ft)[m^2].
8. STORMFILTER STRUCTURE SHALL BE PRECAST CONCRETE CONFORMING TO ASTM C-478 AND AASHTO LOAD FACTOR DESIGN METHOD.

INSTALLATION NOTES
A. ANY SUB-BASE, BACKFILL DEPTH, AND/OR ANTI-FLOTATION PROVISIONS ARE SITE-SPECIFIC DESIGN CONSIDERATIONS AND SHALL BE SPECIFIED BY ENGINEER OF RECORD.
B. CONTRACTOR TO PROVIDE EQUIPMENT WITH SUFFICIENT LIFTING AND REACH CAPACITY TO LIFT AND SET THE STORMFILTER STRUCTURE.
C. CONTRACTOR TO INSTALL JOINT SEALANT BETWEEN ALL STRUCTURE SECTIONS AND ASSEMBLE STRUCTURE.
D. CONTRACTOR TO PROVIDE, INSTALL, AND GROUT INLET PIPE(S).
E. CONTRACTOR TO PROVIDE AND INSTALL CONNECTOR TO THE OUTLET RISER STUB. STORMFILTER EQUIPPED WITH A DUAL DIAMETER HDPE OUTLET STUB AND SAND COLLAR. IF OUTLET PIPE IS LARGER THAN 8 INCHES [200 mm], CONTRACTOR TO REMOVE THE 8 INCH [200 mm] OUTLET STUB AT MOLDED-IN CUT LINE. COUPLING BY FERNCO OR EQUAL AND PROVIDED BY CONTRACTOR.
F. CONTRACTOR TO TAKE APPROPRIATE MEASURES TO PROTECT CARTRIDGES FROM CONSTRUCTION-RELATED EROSION RUNOFF.

CONTECH® ENGINEERED SOLUTIONS LLC
www.contechES.com
9025 Centre Pointe Dr., Suite 400, West Chester, OH 45069
800-338-1122 513-645-7000 513-645-7993 FAX

SFMH60
STORMFILTER
STANDARD DETAIL